Contents

1. Pre-Assembly Preparations..... 1

2. Unpacking and Inspecting Components..... 1

3. Touch Frame Overlay Assembly..... 2

3.1 Symbols..... 2

3.2 Assembling the Frames..... 3

3.3 Examining the PC..... 9

3.4 Installing the Touch Frames..... 10

4. Touch Screen Calibration Tools..... 11

4.1 Touch Screen Status..... 11

4.2 Calibration..... 13

4.3 Signal Review..... 19

4.4 Data Record..... 20

5. FAQs..... 21

6. Maintenance..... 22

1. Pre-Assembly Preparations

What you need to do beforehand:

1) Have a device of which the operation system is Windows, Android, Linux, or iOS; and ensure that there is a USB 2.0 (or USB 3.0) port.
2) Get a socket with the working voltages and frequencies of AC 110/220V-50/60Hz; and ensure that its ground wire has been correctly and safely connected.
3) Prepare one or more screw drivers, preferably PH1 (1#) screw drivers; and a hex wrench (2.0).
4) Based on the size of the touch frame, arrange a flat and relatively spacious area to assembly and test the touch panel. The area shall be flat and contain no irrelevant objects.
5) Ensure that no high-power IR emitters are in the proximity of the installation, testing, and operation environment. The sensitive wavelength range of IR light is 700-1100nm.
6) Keep interruptive devices, i.e. generators and motors, at a distance from the touch frame and wires.

2. Unpacking and Inspecting Components

1) Open the packing box **with caution**.

Note:

a) Please **avoid using cutters** to unpack the touch frame. This helps to prevent damages to the touch frame.
b) Please exercise extra attention to avoid deforming or relocating the DIL pins. Otherwise the signals will be affected.

2) Pick up the packing list.
3) Compare the materials and components with the packing list.
4) If there is any damage or missing objects, contact our customer service immediately.

3. Touch Frame Overlay Assembly

3.1 Symbols

(1) On the back of each aluminum alloy segment for the touch frames, there are symbols for the convenience of assembly.
(2) In the center of each aluminum alloy segment, there is the text of EMIT (or REV) which indicates a particular edge the segment composes (see Figure 1).



Figure 1 An edge Indicator

(3) On each end of the segment, there is a number, which shows the order of the assembly. Also, the number indicates to which other segment it shall be attached (see Figure 2)

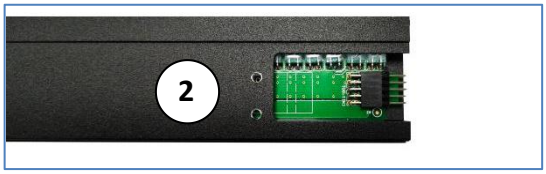

Figure 2 The assembly number

(4) When assembling the frame, you shall follow the assembly numbers in ascending order (see Figure 3 on the next page). In other words, the first two pieces to be joined are the segments with the number ①. After that, connect the segments labeled with ②.

Note:

- As the size of your touch frame is tailored to your unique needs, the number of your aluminum alloy segments may vary from those of the frame in Figure 3.
- For instance, a smaller touch frame may consist of 8 aluminum alloy segments, and thus have the maximal assembly number of 8.
- Figure 3 is going to recur in this manual as an example of a typical touch frame. **Please adjust the assembly procedures according to the size of your touch device.**

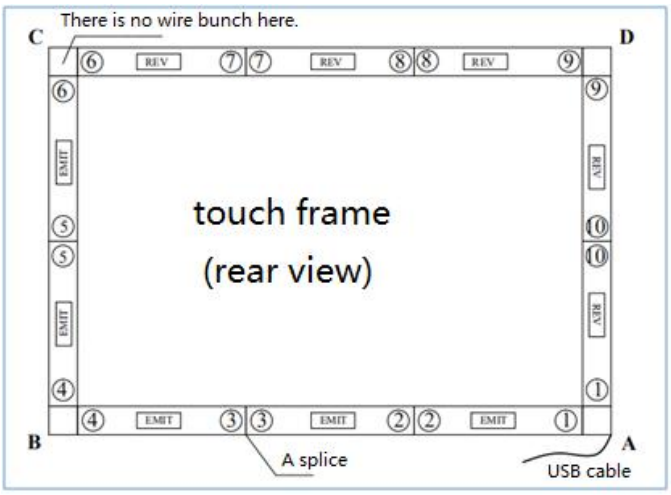

Figure 3 The layout of a touch frame (rear view)

(5) The edge indicators explained:

EMIT = the edge with signal emitters

REV = the edge with signal receivers

3.2 Assembling the Frames

Note:

- As the size of your touch frame is tailored to your unique needs, the number of your aluminum alloy segments may vary from those of the frame in Figure 3.
- Please adjust the assembly procedures to size of your touch device.
- You shall follow the assembly numbers in ascending order.

(1) Assembling an edge (or a part of an edge)

There are two ways to join two aluminum alloy segments to form an edge (or a part of it), the first is to connect PCB boards inside the segments with DIL pins (see Figure 4), the second method is to join them with a wire bunch (see Figure 5). **Be aware** that when installing a wire bunch, the face with red wires shall be on the top.

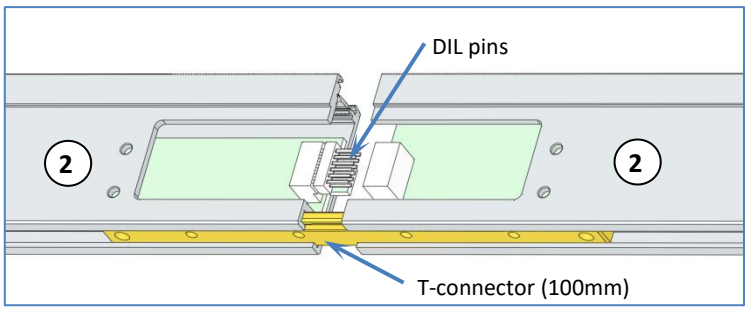

Figure 4 PCB bars connected with DIL pins

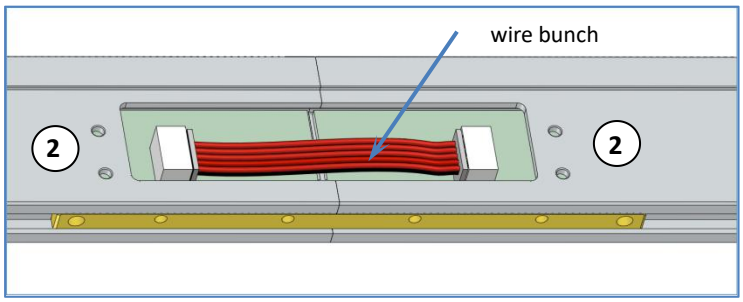

Figure 5 PCB boards connected with a wire bunch

The following are the steps to join two PCB boards with DIL pins

c) Insert one end of a 116mm T-shaped bar along the outer T-slot of a aluminum alloy segment. (see Figure 4).
d) Next, inserted the other end of the 116mm T-shaped bar into the docking (see Figure 4) T-slot.
e) When the two PCB boards are approaching each other, attach the DIL pins to the corresponding pin socket to firmly join the aluminum alloy segments.

(2) Assembling Corner A

a) Find the two aluminum alloy segments labeled with ① and the corresponding corner connecter. As shown in Figure 6, the corner connector has a motherboard and a USB cable.
b) Push the extended edge of a corner connecter into the outer T-slot of a aluminum alloy segment.
c) Then insert the wire bunch into the socket on the PCB board.
d) Repeat the same steps to join a corner connecter to the other aluminum alloy segment labeled with①.
e) A completely assembled Corner A is shown in figure 7.

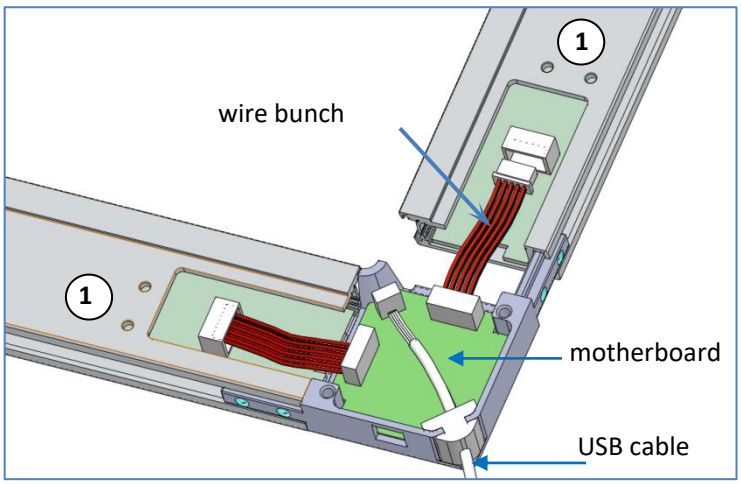

Figure 6 Corner A being assembled

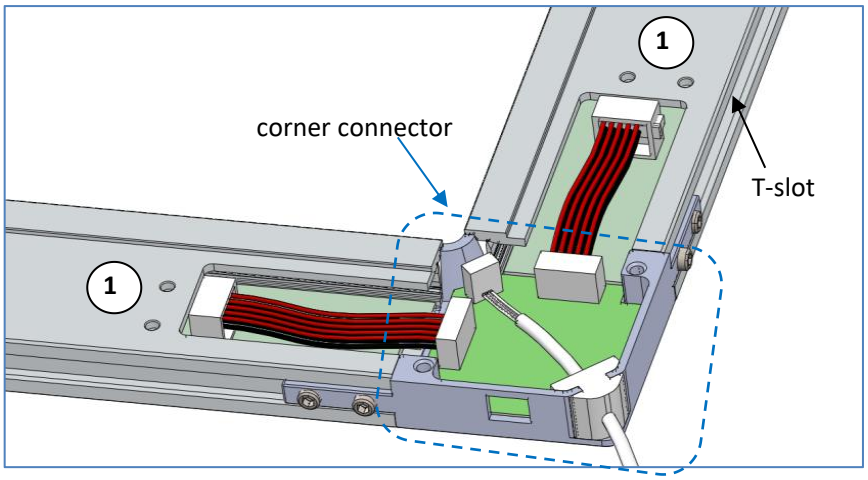

Figure 7 Corner A fully assembled

(3) Assembling Corner B

a) Find the two aluminum alloy segments labeled with ④ and the corresponding corner connecter.

b) As shown in Figure 8, push the extended edge of the corner connector into the outer T-slot of a aluminum alloy segment with the assembly number④ .

c) Then insert the wire bunch into the corresponding socket on the PCB board.

Note: Please ensure that the red face of the wire bunch is on the top.

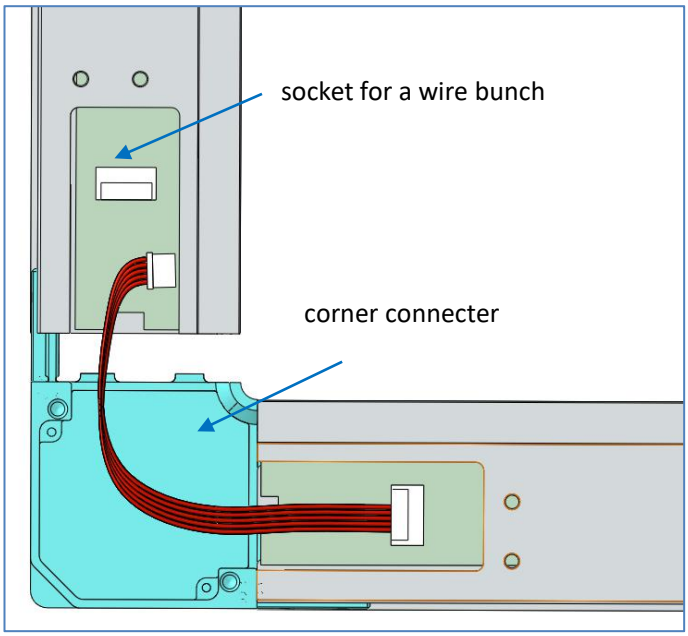

(4) Assembling Corner C

There is no wire bunch on Corner C. Assemble Corner C according to what is shown on Figure 9.

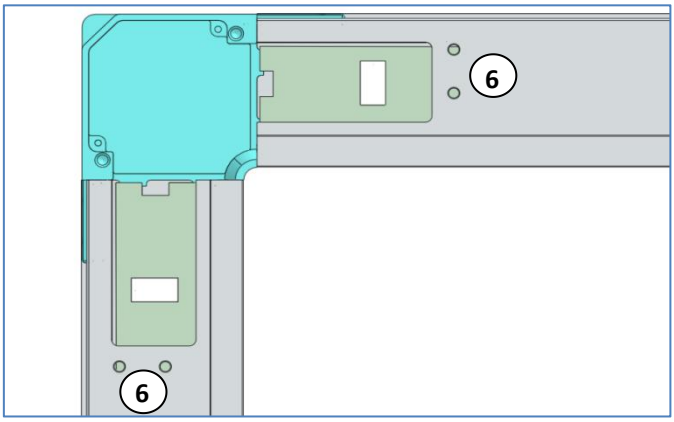

Figure 9 Corner C fully assembled

(5) Assembling Corner D

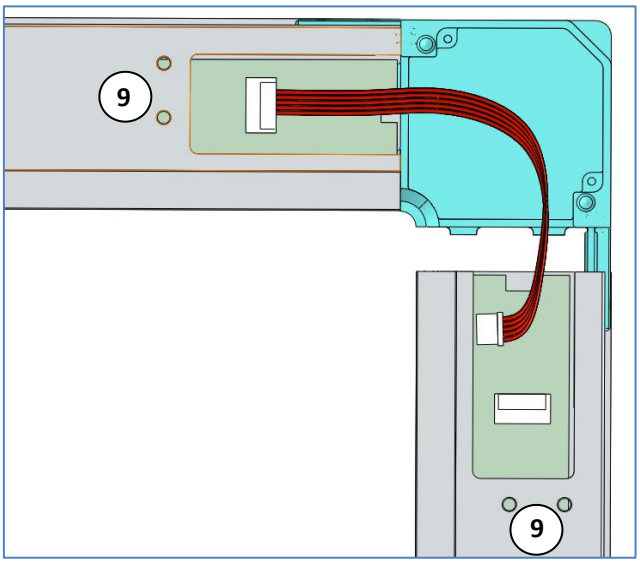

The assembly of Corner D is the same to that of Corner B.

Figure 10 Corner D fully assembled

a) As shown in Figure 10, push the extended edge of the corner connector into the outer T-slot of a aluminum alloy segment with the assembly number⑨ .
b) Then insert the wire bunch into the corresponding socket on the PCB board.

(6) Installing the reinforcing covers

Note: Before the installation, please connect the USB cable to a computer tower. After a short while, when the driver software has been installed, you can implement touch operations on a touch frame (see Figure 11).



Figure 11 Inspecting the touch frame

Note: The touch frame in Figure 11 is way smaller than a WB touch frame. It is presented here only to aid your understanding.

There are two kinds of reinforcing covers, which are **corner covers** and **splice covers**. Here are how to install them:

(a) Installing a corner cover

i. First, ensure that the touch frame is working normally.
ii. With a hex wrench (2.0), secure the pieces that have been connected by screwing in two m4 x 5mm hex head screws. (see Figure 12)
iii. Please make it sure that all the relevant components are seamlessly and tightly joined.

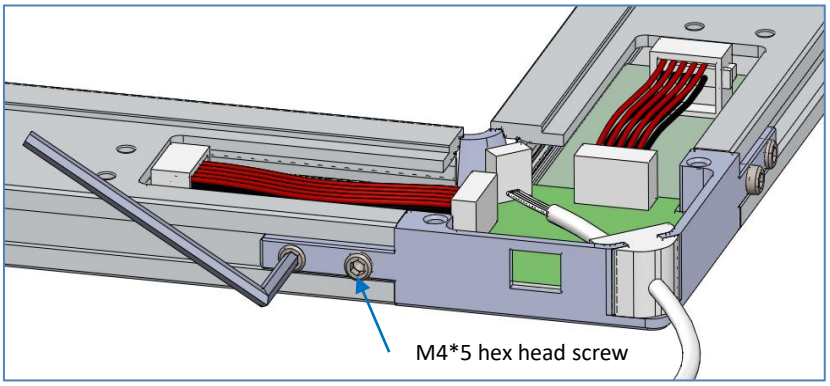

Figure 12 Securing the components of a corner

iv. Place a corner cover above a corner (see Figure 13).
v. Put all of the six M3*4 cross head screws in position. This is important because if

you secure the screws one by one without having put all of them in the right position, you may not be able to install the last few screws.

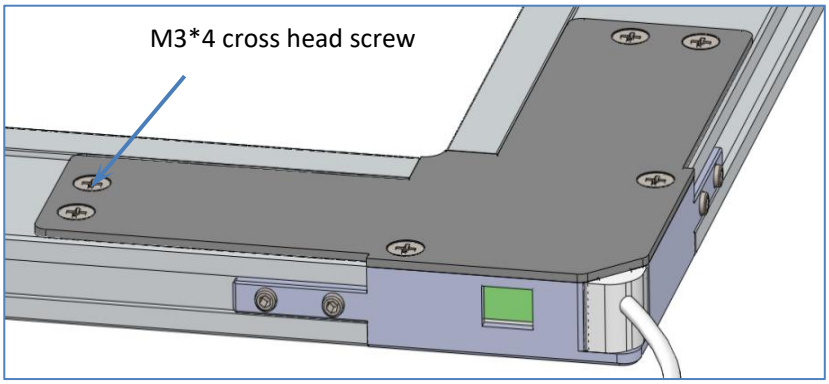

Figure 13 Installing a corner cover

vi. Drive the screws gradually one by one with a screw driver.
vii. Repeat the same steps until all of the four corners are secured with a corner cover.

Note: Please avoid exercising too much force since it will cause the screws to slip.

(b) Installing a splice cover

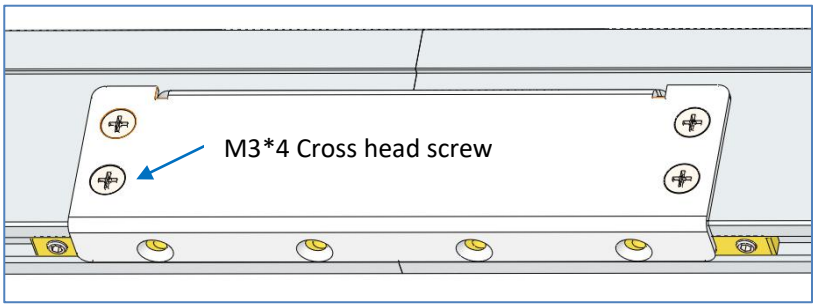

Figure 14 Installing a splice cover

i. As illustrated in Figure 14, first potion all of the four M3*4 cross head screws on the top of the splice cover.
ii. Then gradually drive and rotate the screws to secure them.
iii. Slide the T connector leftward or rightward to align the holes with the ones on the side of the splice cover.
iv. Position four M3*4 cross head screws on the side of the splice cover.
v. Secure the four M3*4 screws.
vi. Scrutiny and secure the M4*5 hex head screws on the two sides of the T connector. (see Figure 15)

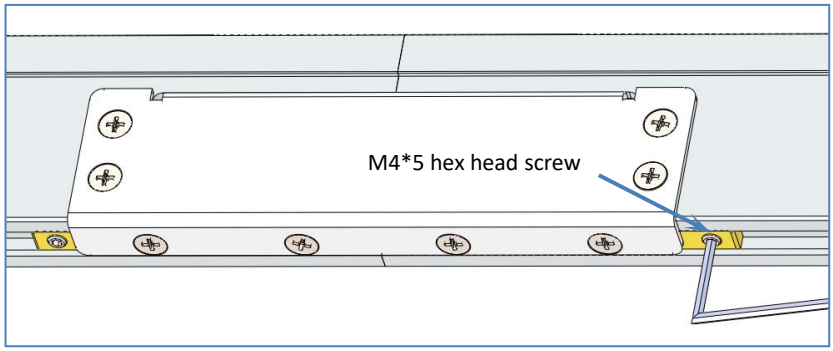

Figure 15 Securing a T connector

3.3 Examining the PC

Note： It is essential to test and adjust the PC before installing the touch frame. Make it sure that you follow the instructions below.

(1) Insert the USB cable on the touch frame into the USB port on the computer tower. Note that the port should be compatible with USB 2.0 or 3.0 standards;
(2) Connect the display device to the computer tower with a VGA/DVI/HDMI cable.
(3) Turn on the computer tower and the display device and ensure that they work properly.
(4) Open **Microsoft Paint**. Move an opaque object in the touch area to see if you can draw lines smoothly on the paint board (see Figure 16 on the next page).
(5) Use the tools provided by the manufacturer to test the touch frame. Please obtain the calibration tool and user manual from the sales specialists and after-sales engineers. Should there be questions and confusion, please inquire of the engineers for further support.

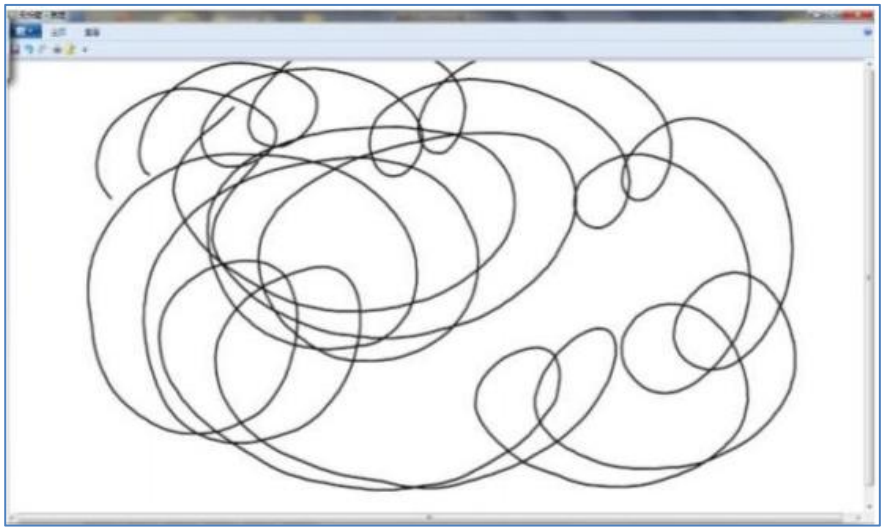

Figure 16 Microsoft Paint

3.4 Installing the Touch Frames

Note: If the assembled touch frames haven't been tested, please do not install them directly onto the display device. Otherwise errors might occur due to faulty splicing.

(1) Inspect the display device to see if there are problems or damages.
(2) Ensure that the display device is clean; Tidy it with a screen wipe to remove dust, grease, hair, and other possible dirt.
(3) If there are compatible structures on the display device to allow the installation of a touch frame, attach and secure the touch frame to the structures.
(4) If compatible touch frame installation structures are unavailable, paste double sided tapes around the touch frame (see Figure 17).

Note:
Please do not leave stains on the display surface when applying double-sided tapes; Please do not apply double sided tape on the corner covers or the splice covers.

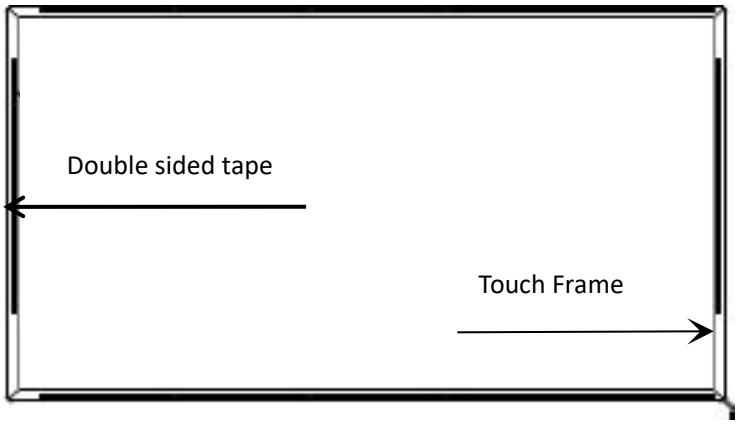

Figure 17 Applying double sided tape

(5) Align the touch frame and the display device. Ensure that the display area and the touch area overlap.
(6) Remove one third of the release liner of the double sided-tape on each line of the touch frame; try to temporarily paste the touch frame onto the screen. In the case of a large-sized and heavy touch frame, get a few people to hold the touch frame to prevent it from falling.
(7) Use DiagTool (see Section 4.3) to view the signals of the touch frame. If the signals are normal, remove the rest of the release liner of the double-sided tape and try to permanently paste the touch frame onto the screen.
(8) Gently press the touch frame to paste it firmly onto the display device.

(9) Installing extra 50mm T-shaped bars
In addition, according to the actual situation of the touch frame installation site, you

can apply more 50mm T-shaped bars to reinforce the touch frame. Please confer with the sales specialist or after-sales engineers for the specific guidance. The installation method is shown as follows:

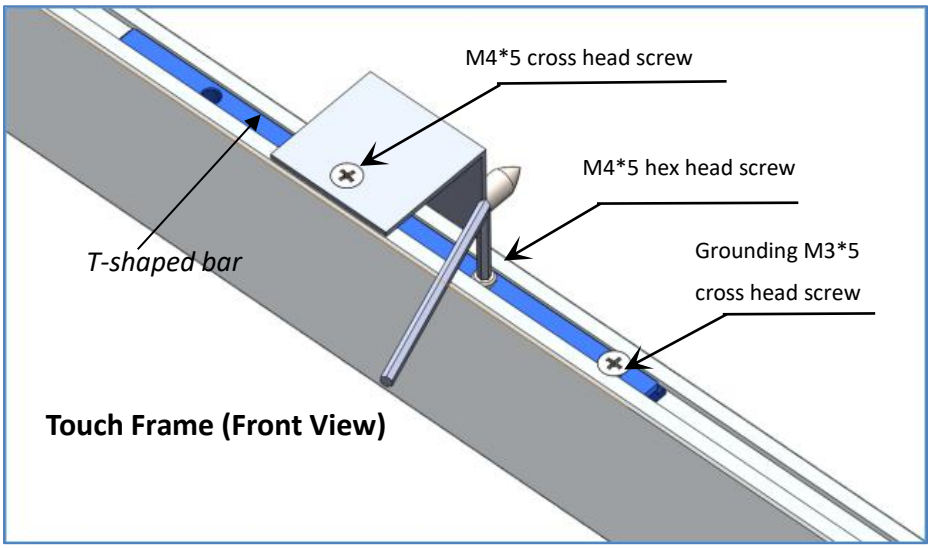

Figure 18 Installing a 50mm T-shaped bar

Note: A 50mm T-shaped bar shall not be confused with a 100mm T-shaped bar. The former is approximately 50mm in length and is used to reinforce and secure a aluminum alloy segment. It is also used for the electrical grounding process. The latter is approximately 100mm in length and functions as the connector of two aluminum alloy segments.

a) Before assembling the touch frame, measure the length of the area where reinforcement is needed.
b) Insert a 50mm T-shaped bar into the outer T-slot of the corresponding aluminum alloy segment. In most cases, the length of aluminum alloy segment is 1600mm or 2400mm, which allows the free and smooth movement of a 50mm T-shaped bar.
c) If the conditions on the installation site allow, cover your own gadget, for example, a hook or a hanger, on the 50mm T-shaped bar. Then secure it with M4*5 cross head screws. (see Figure 18)
d) Lastly, use a hex wrench to secure the M4*5 hex head screws on the side of the 50mm T-shaped bar.

4. Touch Screen Calibration Tools

4.1 Touch Screen Status

a) Launch the calibration software DiagTool (see Figure 19).
b) As our touch frame has been connected to the PC, the message "**Touch Panel Connected!**" will be displayed on the title bar.
c) Should the message "**Disconnected!**" appear, please detach the USB cable and plug it onto the PC again. Or you can insert it into a different USB port on the computer tower.

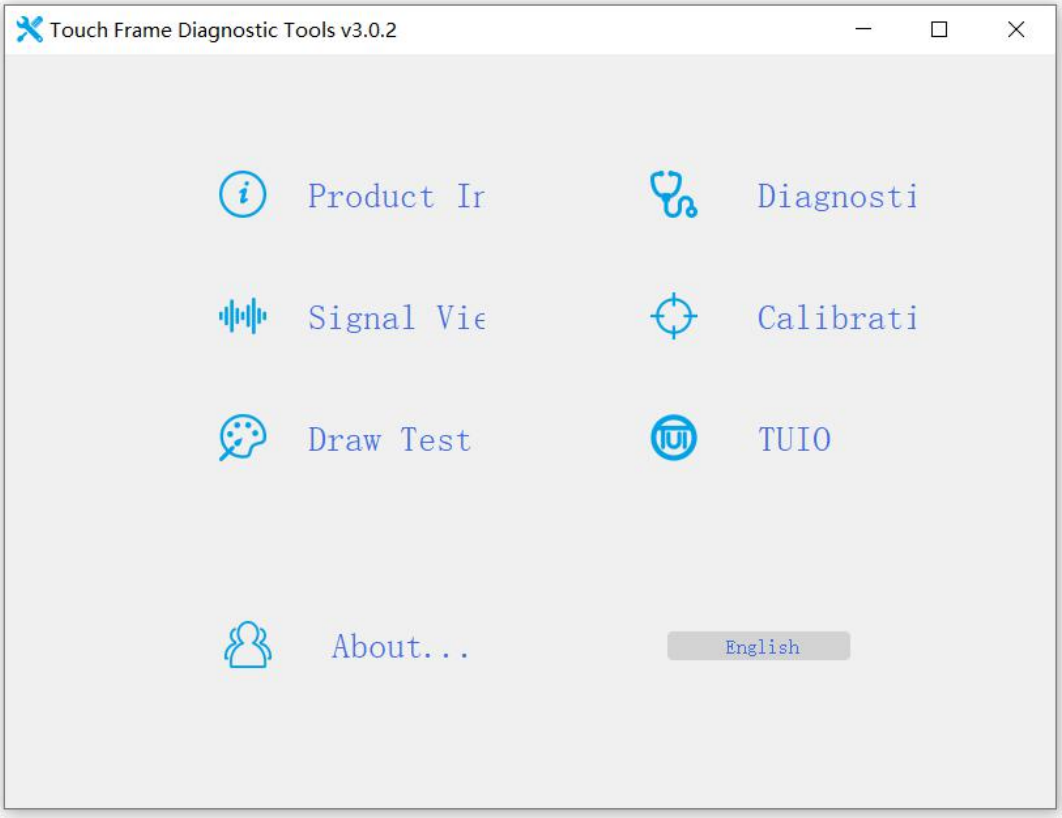

Figure 19 The main window of DiagTool

d) The **Product Information** section enables you to view the basic information of the touch device. You can click **Refresh** in the **Product Information** section to update the device information.

4.2 Calibration

There are mainly 3 steps required to calibrate your touch panel：

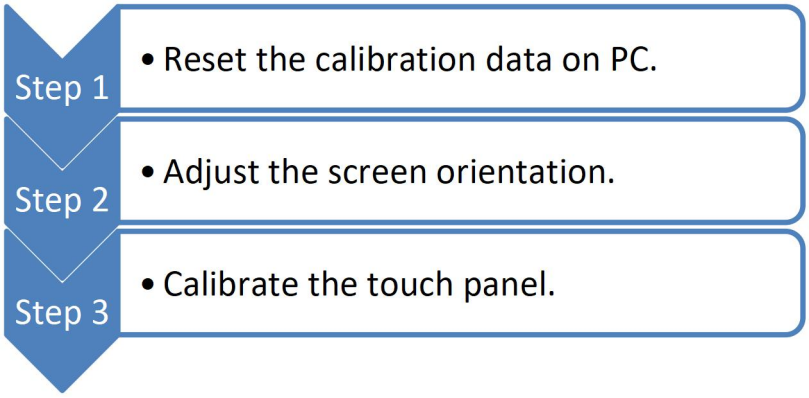

The following are the detailed instructions of the 3 steps.

4.21 Reset the calibration data on PC.

a) Click **Calibration** in the main window (as shown in green in Figure 20). Then the Calibrate window will pop out. Click on the Windows System Calibration button (as highlighted with purple in Figure 20)

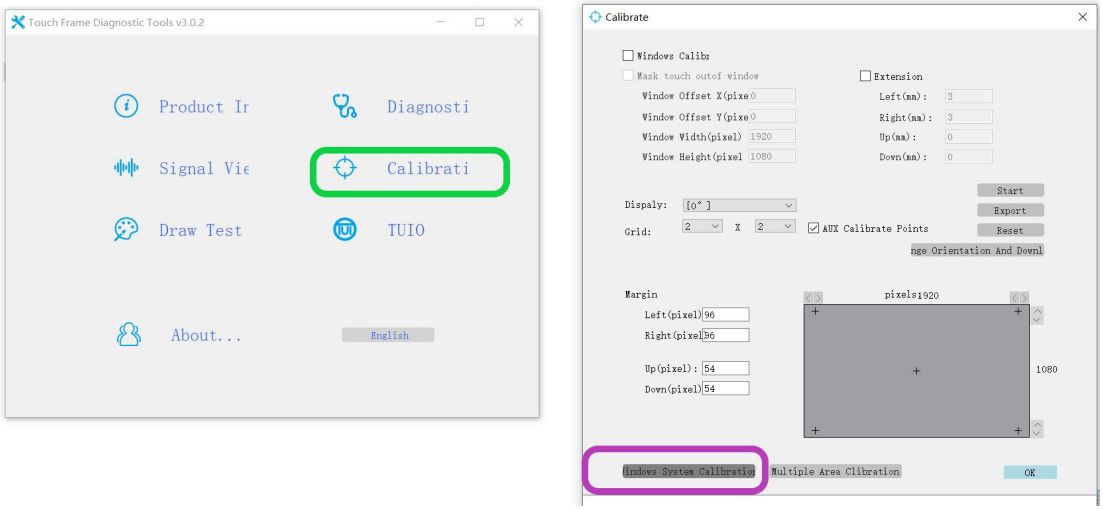

Figure 20 The Calibration button and the Windows System Calibration button

b) Click **Reset** (As shown in Figure 21).

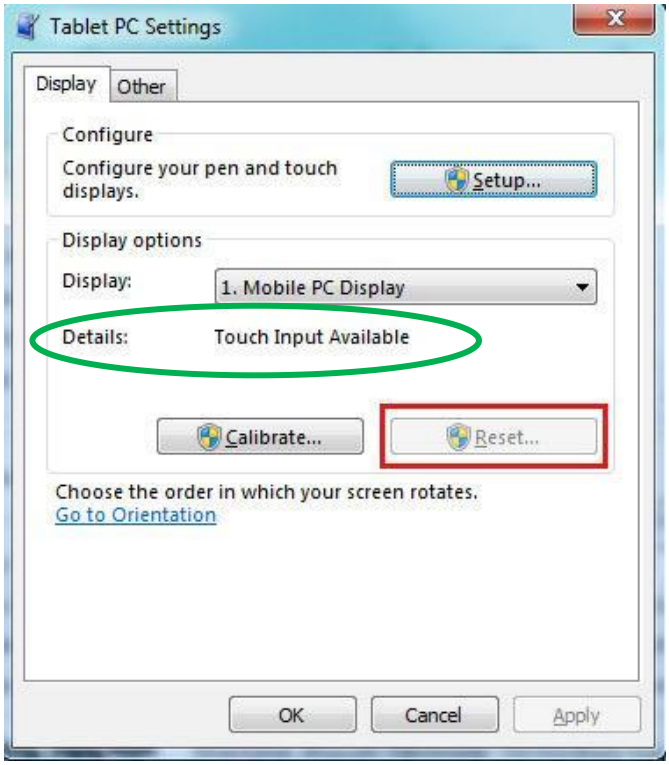

Figure 21 Resetting the Calibration Data on PC

c) If the Reset button is in grey and cannot be clicked upon while the message "**Touch Input Available**" is displayed in **Details** (as highlighted with the green oval in Figure 21), data has already been reset. Please proceed to **Steps 4.22 and 4.23** to calibrate the touch panel.

d) If the **Reset** button is in grey and cannot be clicked upon while a message is shown in **Details to** indicate that no touch input is available, please unplug the USB cable and reattach it to the computer tower. Or try a different USB port on the computer tower.

e) If the calibration data has been generated by the operating system but hasn't yet been reset, please DO NOT use DiagTool to conduct a calibration. This is because the newer calibration data provided by DiagTool will clash with the original data from the operating system. The clash will consequently lead to

faulty touch operations on the touch screen.

4.22 Adjusting the Screen Display Orientation

Before calibrating the touch frame, it is essential to establish that the screen display orientation has been aligned with the conditions of the touch frame. If not, inaccurate touch operations will arise.

a) Firstly, please double check to ensure the touch frame has been connected to the PC.

b) Then, identify the setting of window display orientation on your PC.

For example, on a Windows 10 computer, select "**Screen Resolution**" (see Figure 22) in the **right-click** menu bar of the desktop and you can see **the orientation of the display** (see Figure 23)

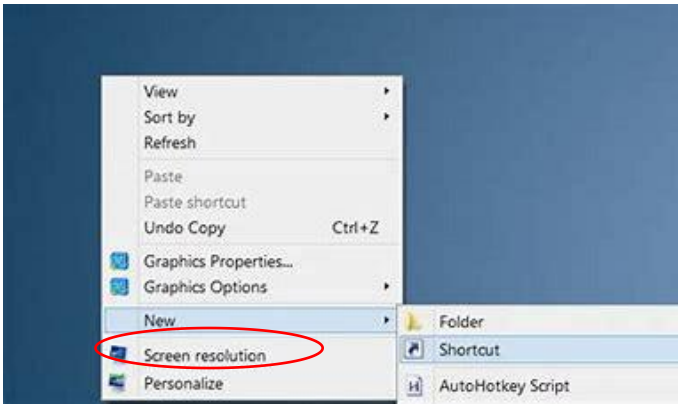

Figure 22 Screen Resolution

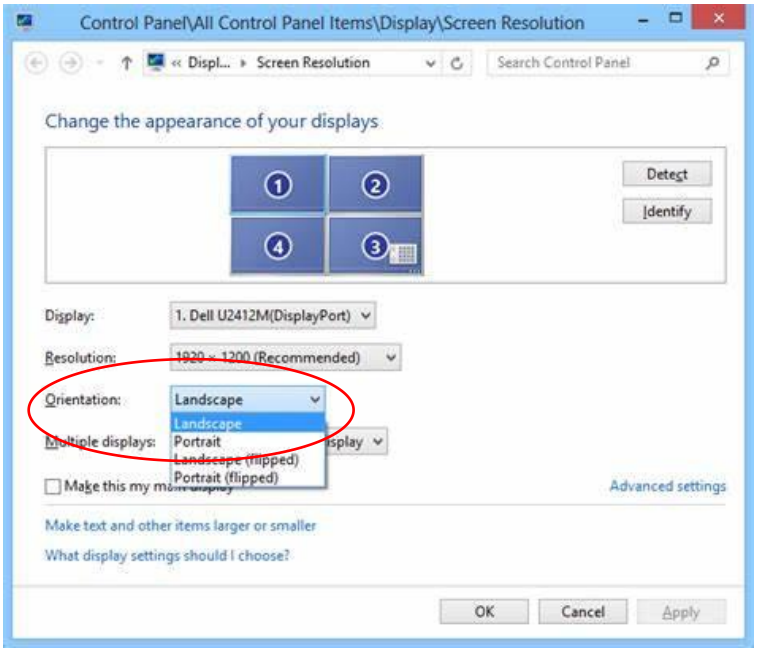

Figure 23 Display Orientation

c) With the orientation of the screen display (on your PC) recognized, apply the corresponding calibration rotation method in DiagTool (see Figure 24).

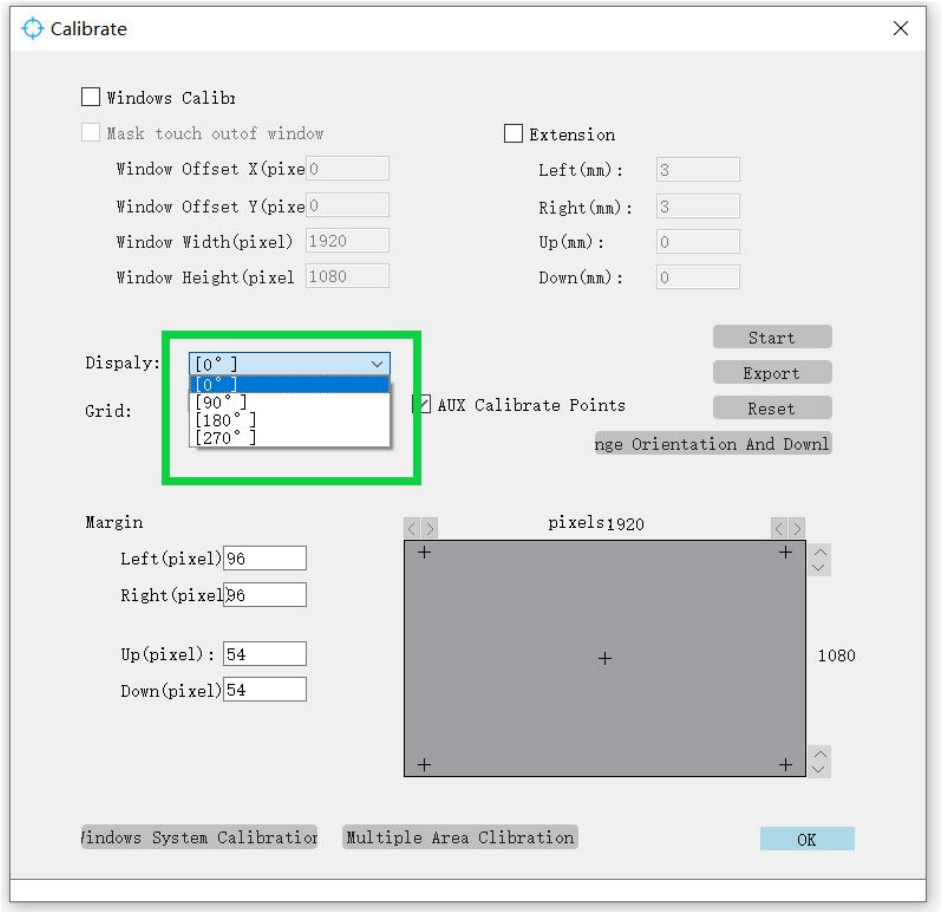

Figure 24 The Calibration Rotation Options in DiagTool

Note:

*The rotation options in DiagTool:

Location of the USB cable	The orientation of the screen display (on your PC)	The calibration rotation method
If the USB cable is at the bottom left corner or the top right corner,	Landscape	0 Degree
	Landscape (flipped)	180 Degrees
	Horizontal	90 Degrees
	Horizontal (flipped)	90 Degrees

d) Please **be aware** that it's essential to apply the correct rotation option. In most cases (as shown above), if your touch frame overlay consists of vertically spliced frames, you shall either choose **Landscape** or **Landscape (flipped)** in DiagTool. In the case of horizontally spliced touch frame overlays, you shall choose **portrait** or **portrait (flipped)** in DiagTool. In rare cases, there can be exceptions.

4.23 Touch Frame Calibration

a) Please click **Start** (as shown in Figure 25) to commence calibration, the window of which is shown in Figure 26.

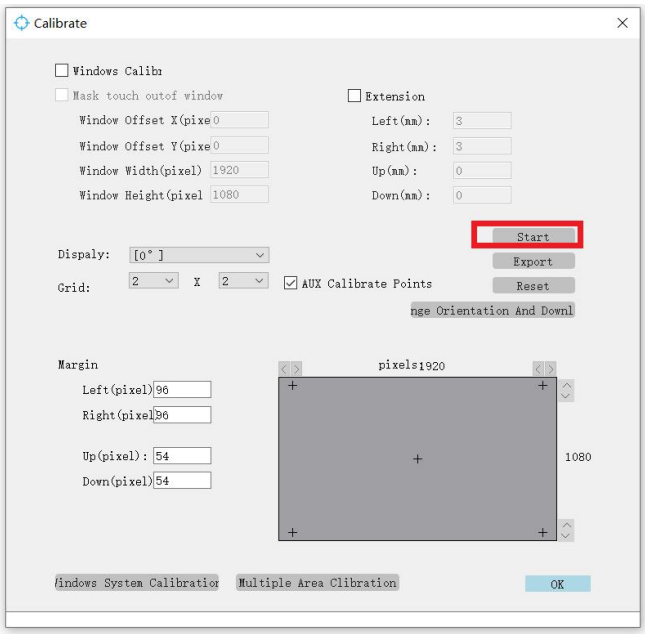

Figure 25

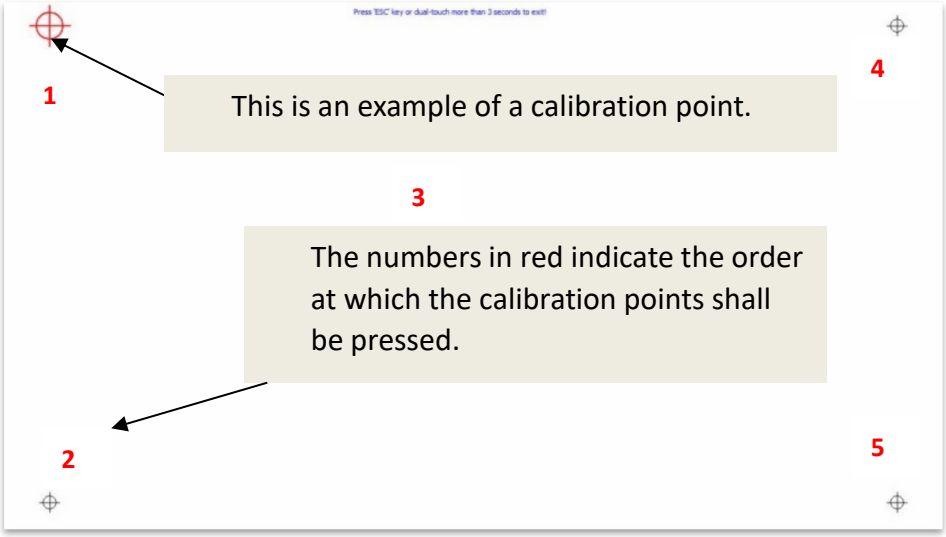

Figure 26 The Calibration Window

b) Long press the center of each of the five red circles until they are all filled with green.

Note: Please try your best to make it sure that your finger forms and the touch screen form **a 90° angle** with the screen (see Figure 27). Try not to tilt your finger.

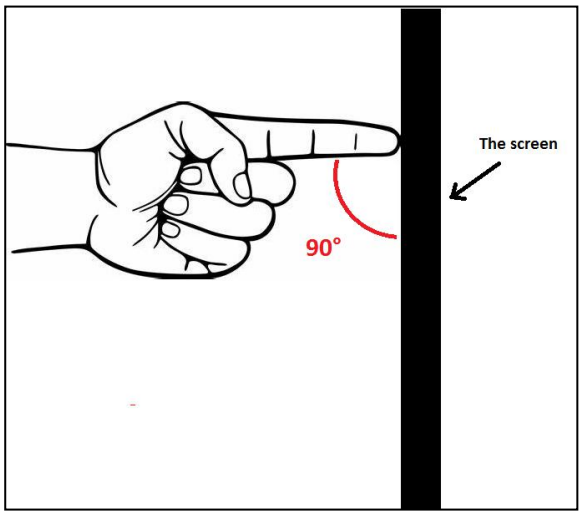

Figure 27 The Recommended Finger Pointing Gesture

c) Once all of the five calibration points have been set, a notice with average calibration error will appear. Examine the calibration result to decide whether re-calibration is needed. In most cases, as long as the error is within 3 mm, the calibration is successful. If the error exceeds 3 mm, please initiate another

calibration.

d) If you need to cancel the calibration before saving the data, press **ESC** (on the keyboard) or **long press with two fingers** to exit the calibration process.

e) Once the calibration data is saved, it can remain valid in the touch panel even if PC or the Operating System has been changed (as long as the resolution of the new PC remains the same), therefore you can switch to any OS of PC(Linux, Windows and Android) without re-calibration. Nevertheless, if a newer OS has been adopted, please note that the calibration data (if any) on the new OS needs to be reset to avoid clashing with the existing calibration data in the touch panel. For the instructions about resetting the data, refer to " **Step 4.21"** of the manual.

4.3 Signal Review

a) Click **Signal View** to enter the signal window (see Figure 28).

Figure28. The "Signal View" window

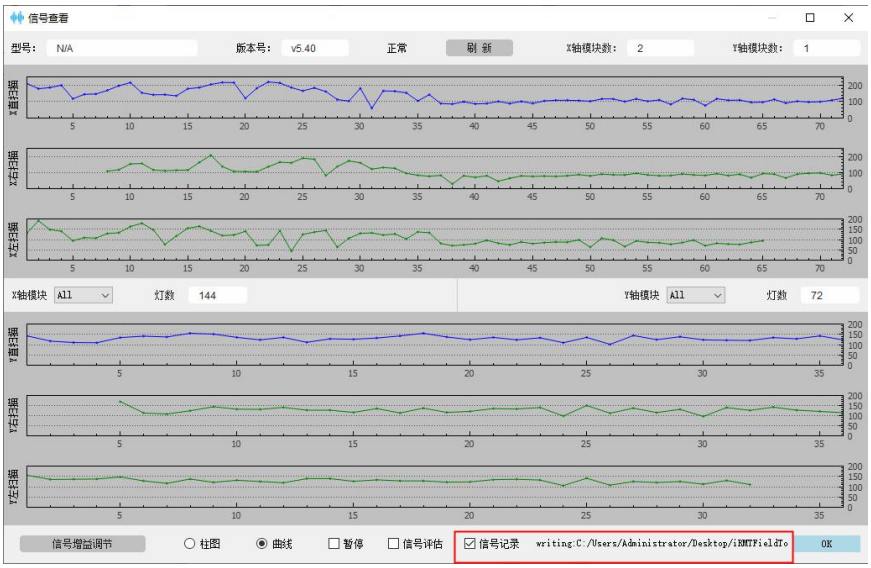

b) Under normal conditions and if there is no touch operation, each LED has a signal (see Figure28). Figure 28 shows the range of signals from properly working

LED lights.

Note: Please be aware that once **Signal View** is activated, the touch screen is on test mode, during which the touch functions will pause temporarily. After closing the **Signal View** window, the touch screen will resume to the normal working mode.

4.4 Data Record

a) If any malfunction arises, for example, blinking points, inconsistent responses to touch inputs, and no response to touch inputs, click **Data Record** (as highlighted in red in Figure 28) to enter the malfunction data recording window.

b) The message ”Diagnostic data recording ” will be displayed on the title bar.

c) To collect comprehensive data about all of the signal emitters and receivers, please place a finger (or a stylus) on the inner rim of the touch frame and slowly glide it along each of the edges in turns to make a complete cycle, as illustrated in Figure 29.

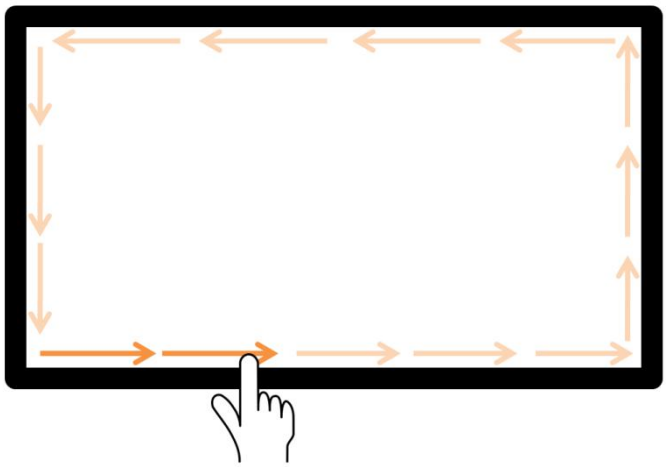

Figure 29 Tracing your finger along the touch frame

d) Close the **Data Record** window in approximately 30 seconds.

e) After that, a txt file with the data will be generated and saved. You can find the txt file in the same folder where Diag Tool has been saved

f) Please have the file sent to your supplier, who will subsequently have the information reported to our tech support team for troubleshooting and solutions.

Note: Please be aware that once **Data Record** is activated, the touch screen is on test mode, during which the touch functions will pause temporarily. After closing the **Data Record** window, the touch screen will resume to the normal working mode.

5. FAQs

Question 1： After connecting the touch panel to the PC, I attempted multi-point touch operations but the system only recognized single-point touch inputs. What went wrong?

Answer: Please double-check the operation system on your PC. Windows XP and Windows 7 Home Basic only support single-point touch inputs. Meanwhile Windows 7 Home Premium, Windows 7 Professional, Windows 7 Flagship, and Windows 8 systems support multi-point touch inputs. Please also note that the version installed should be a normal one rather than a Ghost version.

Question 2: The touch operations in the touch area are not precise. There are discrepancies between the touch points and system points. What should I do?

Answer: This problem can be solved by a calibration. Here are the steps:

1) Please run the calibration software provided by the manufacturer.
2) Connect the touch frame to the PC.
3) Select the **display orientation** in accordance with the orientation of your touch frame.
4) Click the **start** button in the lower right corner, and enter the 5-point calibration interface.
5) Complete the calibration of the 5 calibration points in turn.
6) Please ensure that the average calibration error is less than 1mm. If so, the calibration process is completed.

Question 3: I've connected the touch panel to the PC. However, I am not able to conduct any touch operations. What are the possible causes? How can I solve the problem?

Answer: It's very likely that there are problems with the USB cable connection. Here are the solutions:

1) Check to see if the USB cable of the touch panel connects normally to the USB port of the PC.
2) Check to see if the USB port on your PC is USB 2.0 compatible.
3) Switch to other USB ports available and reconnect the touch frame to the PC.

Question 4: What are the requirements for USB cable transmission distance between the touch panel and the computer tower?

Answer: If the transmission distance is less than 10M, the touch panel and the PC can be directly connected with a USB extension cable. If the distance is between 10M and 20M, please use a USB extender with a signal amplifier. If the distance is between 20m and 50M, the USB extender shall be powered by an external power supply and contain an internet cable.

Question 5: During the installation process of a touch frame, are there any requirements for the glass?

Answer: During the installation of a touch frame, the frame shall stay close to the glass surface. Besides, the glass must be kept horizontal. There must not be any raised parts on the glass surface; otherwise they will block part of the infrared light, thereby affecting the touch effect.

6. Maintenance

1) Do not use metal to hit or tap the touch screen. It will easily cause damage to the touch frame and lead to cracks in glass.
2) Do not place heavy objects on the touch screen, otherwise touch screen may be damaged or distorted in shape.
3) Please regularly clean the touch screen and remove the dust around the glass.
4) When the touch screen is not used, it is recommended to turn off the power.
5) Avoid opening the touch frame; otherwise there might be damages to the inner layer circuit.
6) Should there be problems, please consult the supplier or the manufacturer.